AZUMI READER LED

astro

GENERAL

LOCATION:	Interior
CLASS:	cULus (Class I)
LOCATION RATING:	Dry
DRIVER REQUIRED:	Mains 120V
INSTALLATION ORIENTATION:	Wall Mount
FITTING METHOD:	4" Octagon Box
MAIN MATERIAL:	Metal - Zinc
DIMENSIONS (mm):	H: 212 W: 120 D: 165
DIMENSIONS (inch):	H: 8.35 W: 4.72 D: 6.5
CUT OUT HOLE (mm/inch):	-
RECESS DEPTH (mm/inch):	-
FIRE RATING:	-
CABLE LENGTH (mm/inch):	-
GROSS WEIGHT (LB):	2.6
ADA COMPLIANT:	Yes - if installed in compliance with ADA 307.2, 308, 309.3, 309.4
IC RATING:	Non IC Rated

MAIN LAMP

LIGHT SOURCE:	E26/Medium
WATTAGE:	60W
RECOMMENDED LAMP:	12W Max LED E26/Medium
LAMP INCLUDED:	No
MAXIMUM LAMP LENGTH (mm/inch):	95
LUMINOUS FLUX (lm):	Lamp Dependent
COLOUR TEMP (K):	Lamp Dependent
CRI (Ra):	Lamp Dependent
MACADAM ELLIPSE:	-
TILT ADJUSTABLE ANGLE (°):	-
ROTATION ADJUSTABLE ANGLE (°):	-
AVERAGE LIFETIME (hrs):	Lamp Dependent
BEAM ANGLE (°):	-

SECONDARY LAMP

LIGHT SOURCE:	High Powered LED
WATTAGE:	3.2W
LAMP INCLUDED:	Yes (Integral)
LUMINOUS FLUX (lm):	134
COLOUR TEMP (K):	2700
CRI (Ra):	90
MACADAM ELLIPSE:	3-Step
TILT ADJUSTABLE ANGLE (°):	90
ROTATION ADJUSTABLE ANGLE (°):	180
AVERAGE LIFETIME (hrs):	60000
BEAM ANGLE (°):	19

ADDITIONAL INFORMATION

SHADE INCLUDED:	Shade Sold Separately
SHADE MATERIAL:	-
F MARK:	Suitable for mounting on flammable materials

CODE: 1142036
FINISH: POLISHED CHROME

CODE: 1142037
FINISH: MATT NICKEL

CODE: 1142049
FINISH: BRONZE

MAIN LAMP ELECTRICAL

SWITCHED:	Yes
DIMMABLE:	-
DIMMING METHOD:	-
SUPPLY FREQUENCY (Hz):	50/60
DRIVER/BALLAST VOLTAGE (V):	100-240
DRIVER AVERAGE LIFETIME (hrs):	30000
EFFICACY (lm/W):	Lamp Dependent

SECONDARY LAMP ELECTRICAL

SUPPLY FREQUENCY (Hz):	50-60
DRIVER/BALLAST VOLTAGE (V):	100-277
DRIVER AVERAGE LIFETIME (hrs):	30000
EFFICACY (lm/W):	42

TO MAINTAIN THIS PRODUCT TO ITS BEST CONDITION, PLEASE VIEW OUR CARE AND CLEANING GUIDELINES ON THE SUPPORT SECTION OF THE ASTRO WEBSITE.

ASTRO® IS A REGISTERED TRADEMARK OF ASTRO LIGHTING LIMITED. ASTRO LIGHTING'S FIXTURE DESIGNS AND IMAGERY ARE PROTECTED UNDER U.S. AND INTERNATIONAL INTELLECTUAL PROPERTY LAWS, AND ALL RIGHTS TO SUCH DESIGNS AND IMAGERY ARE EXPRESSLY RESERVED.

PRODUCT ELEVATIONS

astro
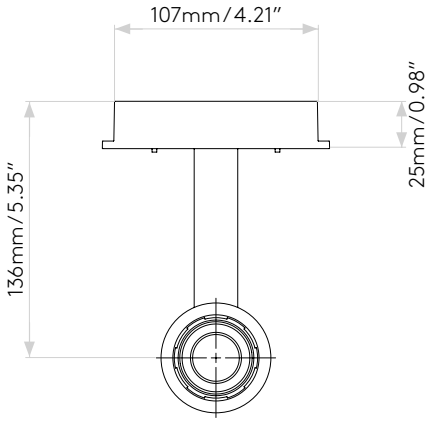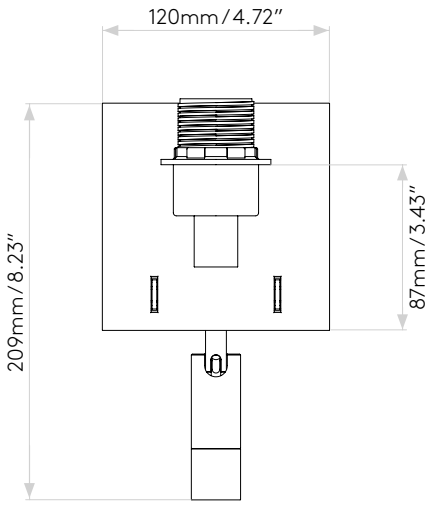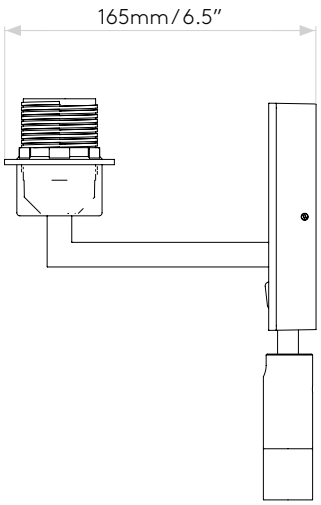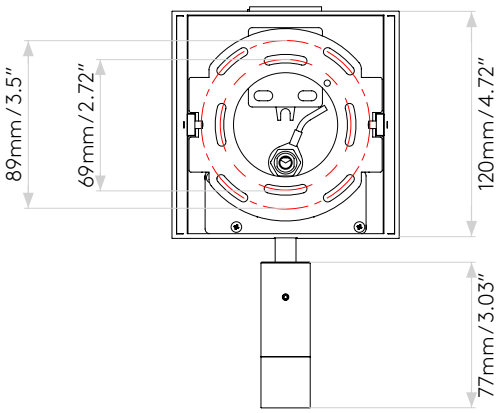
Please note that some dimensions may vary slightly due to manufacturing tolerances, this includes cable entry and fixing holes.