KARLA LED

astro

GENERAL

LOCATION:	Bathroom
CLASS:	cETLus (Class 1)
LOCATION RATING:	Damp
DRIVER REQUIRED:	No
INSTALLATION ORIENTATION:	Wall Mount - Vertical
FITTING METHOD:	½" Stub Mount & 4" Octagon Box
MAIN MATERIAL:	Metal - Zinc
DIMENSIONS (mm):	H: 330 W: 50 D: 90
DIMENSIONS (inch):	H: 12.99 W: 1.97 D: 3.54
CUT OUT HOLE (mm/inch):	-
RECESS DEPTH (mm/inch):	-
FIRE RATING:	-
CABLE LENGTH (mm/inch):	-
GROSS WEIGHT (kg):	2.49
ADA COMPLIANT:	Yes
IC RATING:	-

LAMP

LIGHT SOURCE:	Mid-Powered LED
WATTAGE:	3.9W
LAMP INCLUDED:	Yes (Integral)
MAXIMUM LAMP LENGTH (mm/inch):	-
LUMINOUS FLUX (lm):	365
COLOUR TEMP (K):	3000
CRI (Ra):	80
MACADAM ELLIPSE:	3-Step
TILT ADJUSTABLE ANGLE (°):	-
ROTATION ADJUSTABLE ANGLE (°):	-
LIFETIME (hrs):	54000
BEAM ANGLE (°):	-

ELECTRICAL

SWITCHED:	No
DIMMABLE:	No
DIMMING METHOD:	-
SUPPLY FREQUENCY (Hz):	50/60
DRIVER/BALLAST VOLTAGE (V):	100-277
DRIVER LIFETIME (hrs):	30000
EFFICACY (lm/W):	94

ADDITIONAL INFORMATION

SHADE INCLUDED:	-
SHADE MATERIAL:	-
F MARK:	-

CODE: 1321004 (8457)
FINISH: POLISHED CHROME

TO MAINTAIN THIS PRODUCT TO ITS BEST CONDITION, PLEASE VIEW OUR CARE AND CLEANING GUIDELINES ON THE SUPPORT SECTION OF THE ASTRO WEBSITE.

PRODUCT ELEVATIONS

astro

Please note that some dimensions may vary slightly due to manufacturing tolerances, this includes cable entry and fixing holes.

Without Junction Box

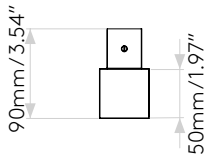

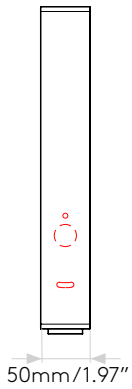

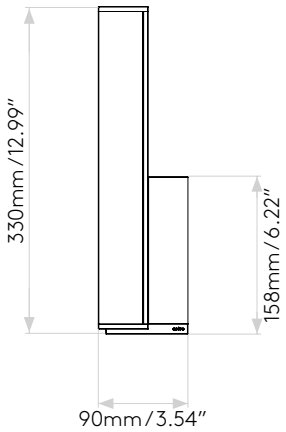

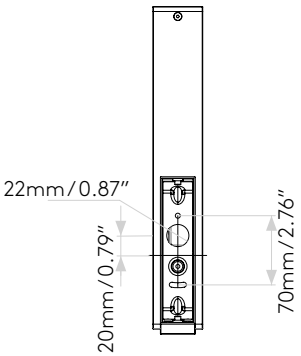
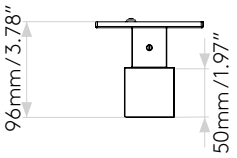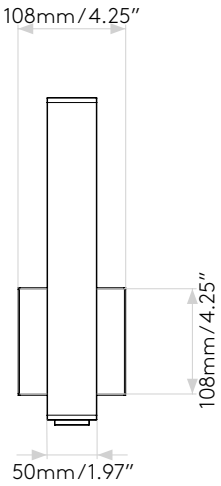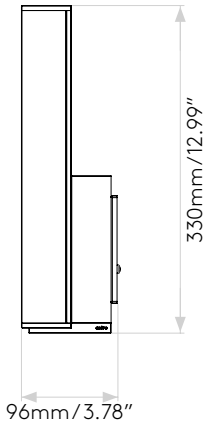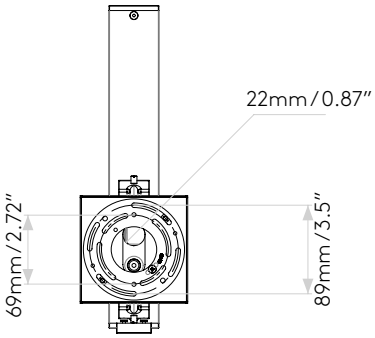
With Junction Box